

COVER PAGE

Document downloaded by @DAEL

Wed Nov 25 03:33:54 2026
For personal use

When automatic English translation is provided, only the original document is authentic.
The EAA cannot be held responsible of any translation error

Bibliographical reference

Planar Reflector Panels with Convex Edges, Jonathan Rathsam and Lily M. Wang, Acta Acustica **vol. 96** (Number 5), 2010, pp. 905-913

DOI
https://doi.org/10.3813/AAA.918349

Acta Acustica united with Acustica
Vol. 96 (2010) 905 – 913

DOI 10.3813/AAA.918349

Planar Reflector Panels with Convex Edges

Jonathan Rathsam, Lily M. Wang
The Durham School of Architectural Engineering and Construction, University of Nebraska-Lincoln, USA.
jrathsam@gmail.com

Summary
When designing rooms for speech or music, acoustical designers often use reflector panels to direct additional sound energy to listeners. Reflector panels introduce some coloration into the reflected signal due to edge diffraction. Furthermore, planar reflector panels reflect sound primarily into a single "specular" reflected direction. This project investigates the reflected sound field from planar acoustical reflectors with rounded reflector edges away from the source side, creating a convex edge. The authors use 2D boundary element method (BEM) sound field simulations to compare the performance of the convex-edged reflectors against flat reflectors. Results show that the convex edge increases nonspecular reflections by 3 dB with each doubling of curvature radius. Because the simulations were run in two dimensions, results generalize only to long reflectors mounted above long sources, such as an orchestra or choir.

PACS no. 43.55.Ka, 43.20.Rz

1. Introduction

Acoustical reflectors in architectural acoustics reflect sound energy toward listener positions, thereby strengthening the direct sound. Although reflectors of a finite size are inherently frequency-dependent, ideally they should not add audible coloration. Rindel [1] has shown theoretically that below a geometric limit frequency, the response from a flat reflector decreases as sound energy diffracts around the reflector. Additionally, above a flat reflector's geometric limit frequency the reflector introduces gentle fluctuations, or ripples, into the signal. According to Beranek [2], the fluctuations above a reflector panel's geometric limit frequency can be avoided if the panel is entirely convex with the center downward. This project investigates improvements to the frequency and spatial responses of reflector panels by rounding only the edges of a flat reflector. This shape was selected based on Olson's success in reducing the coloration in loudspeaker response by rounding the edges of the loudspeaker cabinet [3].

Boundary waves, or edge diffraction, are a physical construct for explaining how a sound field remains continuous around discontinuities in acoustical impedance. For example, at the edges of a free-hanging reflector panel, a discontinuity exists between the impedance of the reflector panel and the impedance of the surrounding air. When sound energy is incident on this discontinuity a boundary wave results. According to one interpretation, the boundary wave arises from secondary sources formed along the edge [4]. Radiation from these comparatively weak sources provides a gradual transition in sound pressure between the zone adjacent to the panel irradiated with direct energy and the shadow zone behind the panel [5]. The energy emitted from these secondary edge sources has negative polarity on the source side of the panel. Destructive interference with the positive polarity first-order scattered energy from the panel center produces non-uniformities in the reflected spectrum.

The interference between primary and diffracted energy is well-illustrated with the example of a loudspeaker driver mounted in a baffle. Some of the sound energy propagates along the surface of the baffle. When this energy reaches the baffle edge, a secondary source is formed at the discontinuity. This secondary source reradiates into free space, interfering with the primary radiated energy.

The effect of sound energy diffracted from the edge of the loudspeaker baffle was documented in 1946 by Nichols [6]. Nichols predicted the frequency of the comb filter at a receiver along the loudspeaker axis based on the radius of the circular loudspeaker baffle. The comb filter frequency corresponded to two arriving pulses with a time shift determined by the difference in travel time between the following two paths. The first path was directly from the driver to the receiver. The second path was from the driver along the baffle surface to the baffle edge and then to the receiver. Nichols named this effect the "baffle effect".

The coloration added to a loudspeaker signal by the baffle effect is undesirable, and Olson sought to reduce the strength of the boundary wave by changing the profile of the loudspeaker baffle [7]. Olson removed the baffle effect by mounting the loudspeaker in a spherically-shaped baffle [3]. Providing a gradual transition in impedance at the edge from the impedance of the baffle to the impedance of

Received 25 June 2009,
accepted 1 May 2010.

© S. Hirzel Verlag · EAA

Document downloaded by @DAEL, 2026-11-25 03:33:57 - personal use only

the air reduced and nearly eliminated the formation of a boundary wave.

Curved surfaces have been shown previously to impact the spatial radiation from outdoor sound barriers as well, since those with rounded caps appear to conduct sound into shadow zones. Several studies have investigated how caps of various shape and acoustical impedance may improve insertion loss when mounted on top of noise barriers. Watts, Morgan, and Surgand report that rigid, round geometries perform quite poorly as barrier caps because they actually conduct sound over the barrier [8]. Decreased insertion loss from round cap geometries was also reported in [9] and [10]. The most thorough analysis of the sound field around a rigid curved surface is provided in [11]. The energy transport mechanism around the rigid surface is described in detail and illustrated with sound field visualizations.

This paper applies the idea of changing the edge conditions of reflector panels in architectural acoustics to reduce coloration as discussed in loudspeaker design and improve spatial responses as studied for outdoor sound barriers. The first goal of this project is to investigate if the ripples in the frequency response above a reflector's geometric limit frequency can be eliminated, as in the response from the circular reflector in Figure 4, by rounding only the edges of a flat reflector. The second goal of this project is to investigate the spatial radiation pattern of acoustical reflectors with convex edges. The final section of this paper presents an investigation into the audibility of reflections from convex-edged reflectors.

2. General methodology and validation

The authors used the boundary element method (BEM) module of Sysnoise Rev 5.2 to simulate the sound field around rigid reflector panels. The analysis was carried out in 2D rather than 3D so simulation time would be minutes as opposed to hours. The reflectors were meshed using a minimum density of six mesh elements per wavelength to ensure a minimal variation of sound pressure across a single element [12]. In each simulation, the source and receiver are located a radial distance of 15 meters from the center of the reflector panel, approximating a typical reflector panel distance in a concert hall.

The total sound field around the reflector panel includes both the direct sound field and the reflected sound field. A subtraction procedure was used to isolate the reflected sound field. First the total field around the rigid reflector was simulated. Next, the direct field without the reflector was simulated. The reflector was made acoustically invisible by assigning to it the impedance of air, 416 Rayls. The direct response was subtracted from the total response at each receiver location. The result is the complex reflected field around the reflector.

To validate the 2D BEM for curved surfaces, a simulation is compared with an analytical solution. According to Skudrzyk [13], the complex reflected pressure of a normally incident plane wave from a rigid cylinder can be

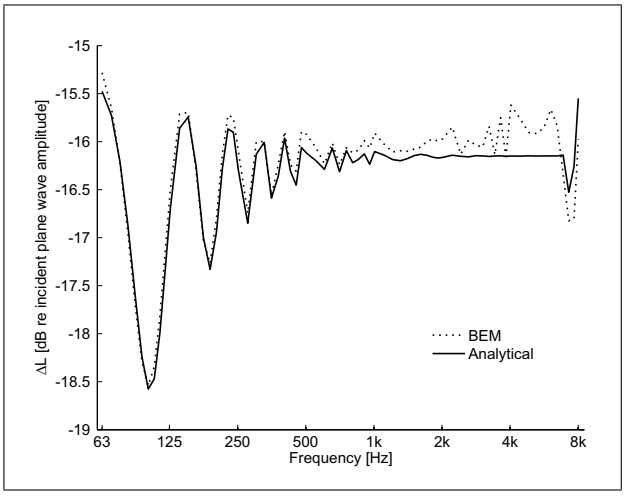

Figure 1. Comparison between BEM simulation and analytical solution to plane wave scattering from an infinite, rigid cylinder with radius of 0.75 m and a receiver distance of 15 m. The angle between the incident and reflected direction is 0°.

expressed as

$$\overline{P}_r = \sqrt{\frac{C}{r}}\overline{P}_i, \tag{1}$$

$$\overline{R} = \sum_{\nu=0}^{\infty} -\varepsilon_\nu j^\nu \left[\frac{J_{\nu-1}(kR) - J_{\nu+1}(kR)}{H^2_{\nu-1}(kR) - H^2_{\nu+1}(kR)}\right] \cdot H^2_\nu(kR)\cos(\nu\theta)\sqrt{\frac{r}{C}}\mathrm{e}^{-\mathrm{j}kr\cos\theta}, \tag{2}$$

where

$$\varepsilon_\nu = \begin{cases} 1 & \text{if } \nu = 0, \\ 2 & \text{if } \nu > 0. \end{cases}$$

In equation (1), $\overline{P}_r$ is the complex reflected pressure, $\overline{P}_i$ is the complex incident pressure, C is the cylinder radius, and r is the receiver distance. $\overline{R}$ is the complex reflection coefficient. $J(kR)$ is a Bessel function of the first kind, and $H(kR)$ is a Hankel function, or Bessel function of the third kind.

As shown in Figure 1, the BEM predicts the frequency response of the cylinder quite satisfactorily. Below 1000 Hz, the difference in predicted level is always below 0.2 dB, and above 1000 Hz, the difference in predicted level is always below 0.5 dB. The authors conclude that the 2D BEM reliably predicts the response from curved surfaces for the frequency range of interest.

3. Comparisons of frequency responses

Frequency responses are simulated for the three source-receiver (S-R) configurations shown in Figure 2. In configuration (1), the sound energy is normally incident on the reflector panel, and the receiver lies within the specular reflection zone. If a receiver is in the specular reflection zone, it means that if the reflector were a mirror, an observer at the receiver's position would be able to see the source's image in the mirror. In configuration (2) sound

Document downloaded by @DAEL, 2026-11-25 03:33:57 - personal use only

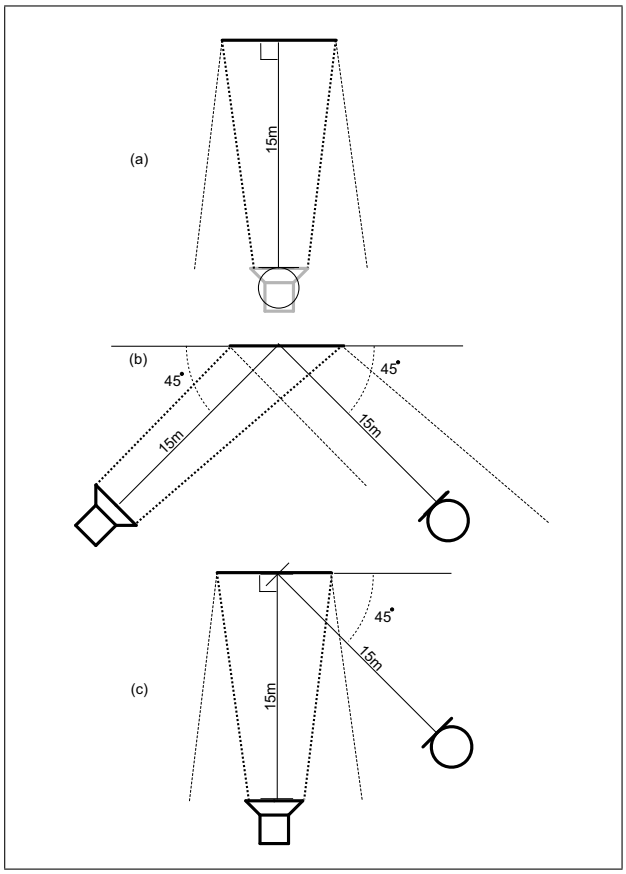

Figure 2. Source, reflector panel, and receiver geometry for configurations (a) 1, (b) 2, and (c) 3.

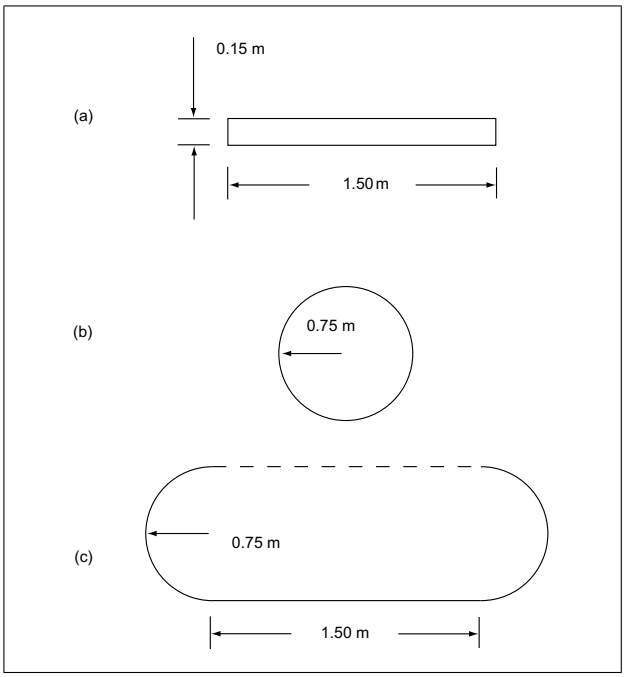

Figure 3. 2D reflector panel geometries: (a) flat, (b) circular, and (c) convex-edged. The dotted line is removed subsequently from geometry (c) to create an "open" reflector in Figure 5.

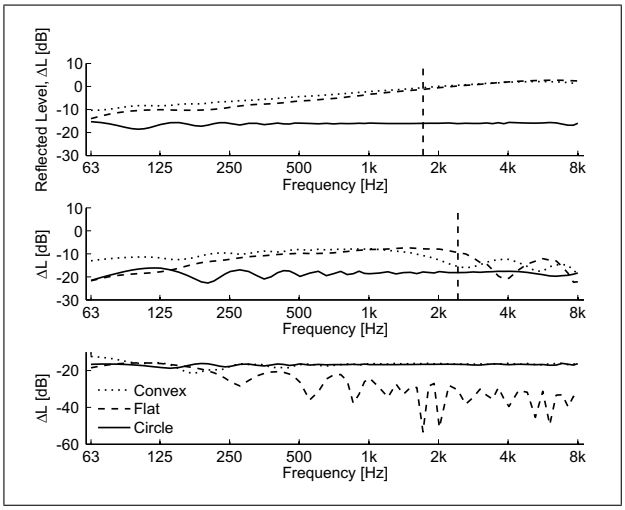

Figure 4. Response from flat, circular, and convex-edged reflector panels for S-R configurations (a) 1, (b) 2, and (c) 3. The geometric limit is indicated with a vertical dashed line. In configuration (3), the receiver is outside the specular reflection zone so the geometric limit does not apply.

energy is incident at 45° on the reflector panel, and the receiver is again in the specular reflection zone. In configuration (3) sound energy is normally incident on the reflector panel, but the receiver is outside the specular reflection zone. All of the scattered energy arriving at the receiver in configuration (3) originates from the boundary wave.

Simulations were run in the 2D plane with the source and receivers located below the three types of reflectors shown in Figure 3. The flat panel in Figure 3a is a reflector panel with typical dimensions. It was simulated here with a thickness of 0.15 meters, although in subsequent simulations the reflector was modeled as an infinitely thin panel, as in Figure 9a, without noticeable difference. Figure 3b shows a circular reflector, which is expected to scatter energy approximately uniformly across frequency. The convex-edged reflector in Figure 3c is a combination of the previous two panels. It has the 1.5 meter flat bottom and top, but the sides are rounded upward with a radius of 0.75 meters.

The frequency responses from the reflector panels in Figure 3 under the three source-receiver configurations in Figure 2 are shown in Figure 4. For S-R configuration (1) the convex-edged panel's response is nearly identical to the flat panel's response. The response is determined by the physically flat bottom, which is common to the flat and convex-edged reflectors. The response increases with frequency as it approaches the panel's geometric limit frequency. The circular reflector's response, on the other hand, is approximately constant across this frequency range. The dotted vertical line represents the geometric limit frequency for the flat reflector.

S-R configuration (2) further illustrates that the convex-edged reflector responds as the flat reflector. The convex-edged reflector's response has the same shape as the flat reflector response, but the location of the first peak is shifted lower in frequency by 500 Hz. As before, the response from the circular reflector is flatter and contains less en-

Document downloaded by @DAEL, 2026-11-25 03:33:57 - personal use only

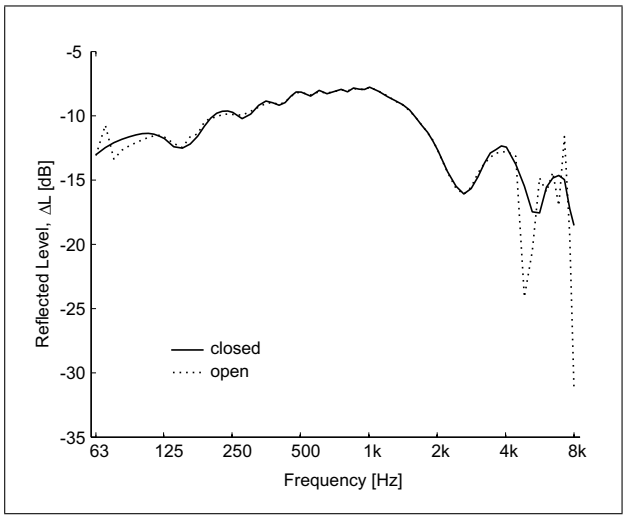

Figure 5. The response from the convex-edged reflector in Figure 3c under configuration (2) for "closed" geometry and "open" geometry. The presence of the reflector top affects the response only in narrow bands at high frequencies.

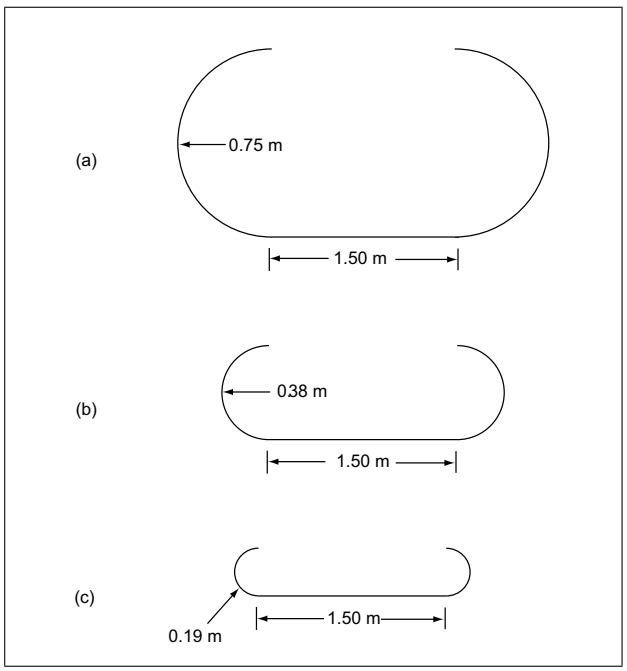

Figure 6. Convex-edged reflectors with curvatures of decreasing radii.

ergy than the other two responses. In this configuration, the geometric limit has increased because of the oblique incidence.

In S-R configuration (3) with the receiver outside of the specular reflection zone, the convex-edged reflector response is constant and nearly identical to the circular panel response. The flat panel response, on the other hand, decreases on average at 6 dB per octave. For the flat panel, all energy reaching the receiver originates from the boundary wave. Therefore, the convex-edged reflector behaves like a flat reflector in the specular reflection zone and like a circular reflector outside of the specular reflection zone, combining the advantages of each to reflect as much energy as possible to receivers inside and outside the specular reflection zone.

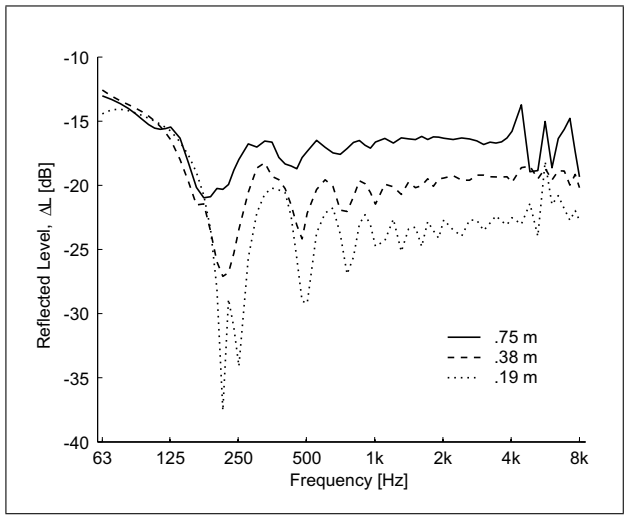

Figure 7. Frequency response from reflectors with decreasing radii for S-R configuration (3).

Next, the authors modified the convex-edged reflector panel to make it more practical. For example, the amount of material can be decreased by removing the flat surface on the top, shown as a dotted line in Figure 3, to create an "open" instead of a "closed" reflector. Simulations comparing the open and closed reflector, shown in Figure 5, confirm that the flat portion on the non-source side of the reflector affects the response in certain narrow bands at high frequencies. The abrupt change in impedance created by removing the dotted segment at the top creates a boundary wave. The boundary wave propagates from the discontinuity, back along the curved surface, to the receiver location where it interferes with the primary reflected energy to create a ripple. Because only certain narrow bands are affected by the interference, the average response at high frequencies is expected to remain constant between the "open" and "closed" configuration.

Decreasing the radius of curvature further reduces the amount of material used. Three convex-edged reflectors with decreasing radii were considered, as shown in Figure 6. Simulation results show that changing the curvature radius affects the response only at the nonspecular receiver in S-R configuration (3). For nonspecular receivers on the source side of the reflector, halving the curvature radius lowers the reflected magnitude above 500 Hz by 3 dB, as seen in Figure 7. The frequency dependence of the nonspecular energy also changes slightly with curvature radius. The comb filter effect becomes more pronounced with smaller curvature radius, and the major first dip shifts slightly higher in frequency.

The 3 dB increase in nonspecular reflections contrasts with the behavior of specular reflections, which above the geometric limit frequency do not increase in magnitude with reflector area. In other words, enlarging the flat portion of the reflector does not increase the magnitude of

Document downloaded by @DAEL, 2026-11-25 03:33:57 - personal use only

specular reflections, but increasing the radius of the convex edge does increase the magnitude of nonspecular reflections. Designers can therefore use the convex edge to increase the magnitude of reflections in nonspecular directions.

The research question was whether the high frequency coloration from a finite reflector panel can be smoothed by adding convex edges. As shown in Figure 4 and Figure 7, adding convex edges to the sides of a reflector panel does not eliminate the ripples in the frequency response as it did in Olson's investigation of loudspeaker enclosures. This is mainly because Olson sought a smooth response along the loudspeaker axis only, while reflector simulations in this chapter examine oblique source and receiver locations. Convex edges did, however, increase high frequency reflected magnitude outside the specular reflection zone, as shown in Figure 4c. The convex edges eliminate the 6 dB per octave decreasing response from the flat panel for nonspecular receivers. The desired reflection magnitude at nonspecular receivers can be designed by choosing the appropriate curvature radius.

4. Comparisons of 2D spatial responses: Flat versus convex-edged reflectors

The results of these BEM simulations can also be viewed spatially. A spatial response, or beam pattern, of the reflected magnitude displays the response at a single frequency or frequency band across a spatial receiver array. To better understand the behavior of a convex-edged reflector, its spatial response is compared to that of a flat reflector. Figure 8 shows the 4000 Hz spatial response of the convex-edged reflector (Figure 6c) versus the flat reflector (Figure 9a) for normal incidence and 45° incidence. At both incidence angles, the reflected magnitude is the same in the specular reflection zone. However, outside the specular zone, the reflected magnitude is 10 to 15 dB higher from the convex-edged panel.

Examining Figure 8, one sees that more energy is contained in the convex-edged reflector response than in the flat reflector response. Given that the same amount of energy is incident on each panel, does this difference violate energy conservation?

The authors had two hypotheses for why more energy is reflected from the convex-edged reflector. The first hypothesis was that the convex-edged panel prevents more sound transmission than the flat panel to the non-source side of the panel. The extra energy that appears on the source side of the panel is transferred from the non-source side of the reflector to the source side. The second hypothesis was that the amount of reflected energy is proportional to the size of the reflector. The convex-edged reflector reflects more energy because it is longer than the flat reflector panel, as shown in Figure 9.

To test these hypotheses, the spatial responses from three reflector panels are simulated around a receiver array that encircles the entire reflector panel. The source is placed in configuration (1) at a distance of 6.56 meters

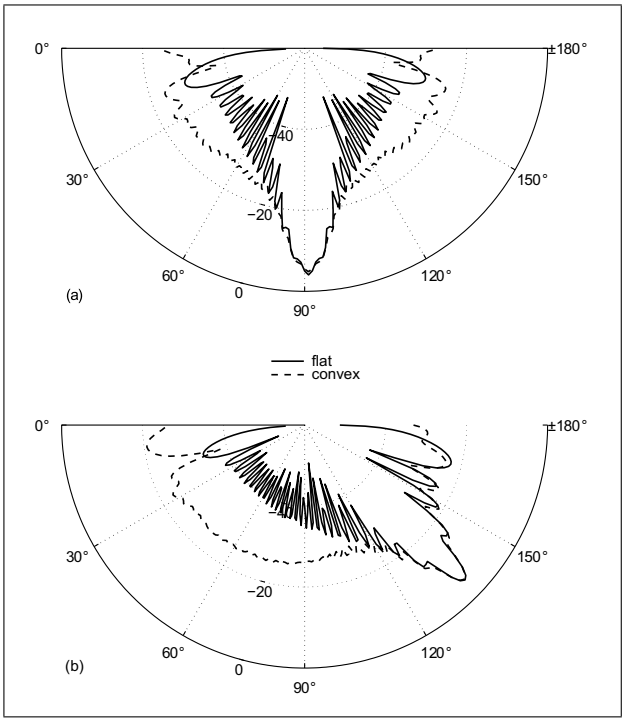

Figure 8. Spatial response at 4000 Hz from flat and convex-edged reflectors at (a) normal and (b) 45-degree incidence.

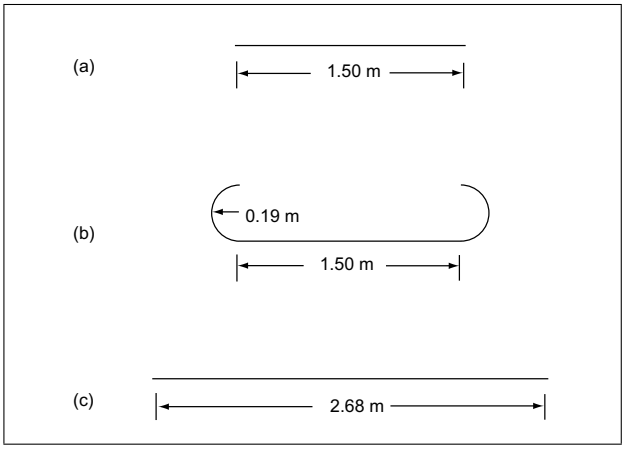

Figure 9. (a) Flat(short) panel, (b) convex-edged panel, and (c) flat(long) panel whose length is equal to the overall length of the convex-edged panel.

from the reflector. The receivers are placed in a circular array of radius 6.56 meters from the center of the panel. The simulation is conducted at 10 kHz to minimize the effects of diffraction around the reflector panels. The reflector panel geometries in this investigation are shown in Figure 9. The flat(short) panel has a dimension of 1.5 m, which is equivalent to the flat portion of the convex-edged panel. The flat(long) panel has a dimension of 2.68 m, which is equivalent to the overall length of the convex-edged panel.

The simulated beam pattern responses are displayed in Figure 10. The response from the flat(long) reflector has noticeably more energy than the response from the

Document downloaded by @DAEL, 2026-11-25 03:33:57 - personal use only

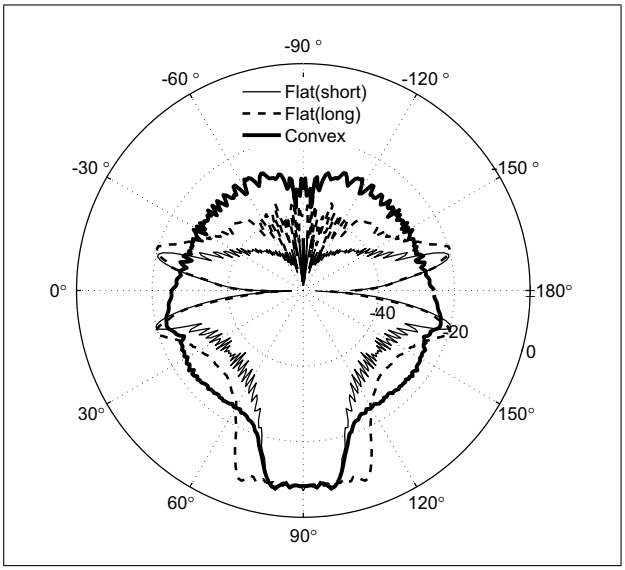

Figure 10. The beam pattern at 10 kHz from the three reflector panels shown in Figure 9.

flat(short) reflector. However, it is not clear from inspection whether there is more energy in the response from the flat(long) reflector or from the convex-edged reflector. Therefore, the energy from each of the curves is summed across all receiver locations. The scattered energy from the flat(long) reflector is 1 dB greater than the energy from the convex-edged reflector. The energy from the flat(short) reflector is 3 dB less than the energy from the convex-edged reflector. This result shows that the second hypothesis is correct: the amount of scattered energy depends on the cross-section of the reflector. More energy is scattered from the convex-edged panel in Figure 8 because the total length of the convex-edged reflector is larger than the length of the flat(short) reflector. If the flat panel has the same total length as the convex-edged panel, then the total scattered energy will be approximately equivalent. Differences in the amount of scattered energy also arise due to the orientation of the surface. The top part of the convex edge, for example, receives no direct energy from the source, which decreases the total strength of the scattered field compared to the flat(long) reflector.

The effect of adding a convex edge, then, is two-fold. The overall scattered energy is increased from that of the flat(short) panel alone because of the increase in reflector size. The spatial distribution of this energy is changed as well due to the orientation of the convex edges. As shown in Figure 10, the flat response in the specular reflection zone has the same spatial extent for the convex-edged panel and for the flat(short) panel because the flat reflector cross section has the same length for these reflectors. The flat(long) panel is longer, resulting in a larger specular reflection zone. The convex edges, then, effectively redirect energy from the specular reflection zone to nonspecular receivers. In particular, the convex-edged panel increases scattered energy at receivers between the angles of 25° and 60° with respect to the reflector surface, as shown in Figure 10. This high frequency redirection can be understood in terms of geometric acoustics. The incident wave can be treated as a ray bundle that reflects specularly from the surface according to incidence angle at the point of reflection. When the edges of the flat(long) panel are curved upward into a convex-edged panel, the energy from the flat(long) reflector is simply transferred from the classical specular reflection zone to receivers outside the classical specular reflection zone. A semi-specular reflection zone is formed, consisting of receivers that can "see" the source reflected not in the flat reflector bottom, but in the convex edge.

5. Audibility of reflections: Flat versus convex-edged reflectors

Characterizing the response magnitude alone from a convex-edged reflector panel tells nothing of its audibility in the overall sound field. An acoustical design principle is only useful to the extent that it produces audible acoustical improvements. This section examines the audibility of reflections from the convex-edged reflector compared with reflections from a flat reflector using a simplified audibility criterion. Below is a short literature review of previous studies investigating the audibility of reflections.

The audibility criterion, known in the literature as a "masked threshold" or "threshold of detectability of reflections", is the level difference between the primary sound and the reflection at which the reflection causes any detectable difference in the signal [14]. The masked threshold of a reflection can depend on many variables, including signal type (click, music, speech, or noise) and frequency content, listening environment (reverberant or anechoic), direct incidence angle, reflection incidence angle, and time delay of reflection [15]. While it is difficult to find a single study in the literature whose variables match the conditions of the current study, the combined results of multiple existing studies motivate a choice of −20 dB as an audibility criterion.

In a study by Begault [16], four subjects were presented with anechoic speech stimuli over a virtual reality system using each subject's individual head-related transfer function. The variables were room size, angle of reflection, and time-delay of reflection. The grand mean of "threshold of detection" was −19 dB. Begault recommended adjusting the threshold down to −23 dB based on individual differences from an initial study, but he also recommended adjusting the threshold up by 2–5 dB if the environment is reverberant and/or the interaural time difference is low. For a convex-edged reflector in a concert hall, the environment is reverberant and the reflector is equidistant from both ears when a listener is facing the stage so the interaural time difference is low. Thus, Begault's results suggest a masked threshold of −16 dB to −21 dB. This threshold range includes the masked reflection threshold of −20 dB adopted by Bech [17].

The time delay of Begault's reflections (10–18 ms) are much shorter than the time delay of reflections modeled in the current study (= 80 ms). Longer time delays were

Document downloaded by @DAEL, 2026-11-25 03:33:57 - personal use only

used, however, in a study of reflection detection thresholds by Olive and Toole using loudspeakers to reproduce reflections [18]. In a normal listening room with strong early reflections and moderate reverberation, the masked threshold of speech signals with 80 ms delay was also found to be nearly −20 dB (Figure 11 in [18]). In this case the reflection was displaced 65-degrees horizontally from the frontally-incident direct sound. Nevertheless, Olive and Toole claim that a horizontal displacement of the reflection has a similar effect as a vertical displacement on masked thresholds in this study. This result implies that a masked threshold of −20 dB may be applied to a vertically displaced reflection, such as the one in the current study.

With regard to spectral dependence, Olive and Toole conclude that for pink noise, speech, and pulses at 1 per second, low-pass filtering the signal down to 500 Hz had little effect on the masked threshold of reflections with a delay of 4 ms. For pulses at 5 per second and 20 per second, the masked thresholds increased noticeably as high frequencies were removed. Nevertheless, the signals of interest for convex-edged reflectors are speech and music, so continuous signals such as speech and pink noise are more representative than the pulse results. Olive and Toole's result suggests that using the same audibility threshold for all frequency bands might be justifiable for continuous signals.

As for the type of stimulus, Olive and Toole find that pink noise can be a good substitute for orchestral music in masked reflection threshold measurements. In a test of a single lateral reflection in an anechoic environment, masked thresholds for pink noise reflections match the masked threshold for reflections using a Mozart excerpt for time delays of 0 ms to 80 ms (Figure 6 in [18]). The pink noise reflections were horizontally displaced at 65 degrees and the Mozart excerpt reflections were horizontally displaced at 40 degrees. The current authors conclude that there is sufficient precedent for using a masked reflection threshold of −20 dB as an audibility criterion in the current study.

In the following figures, the audibility criterion of −20 dB is plotted as a dotted line. The reflection magnitudes are plotted as solid lines. Figure 11 and Figure 12 show results from the flat(short) panel (Figure 9a) and the convex-edged panel (Figure 9b). The curves are normalized to the maximum level of direct sound, which occurs at the source position. As a result, the −20 dB audibility criterion is maximized at 90° for normal incidence, and at 45° for 45° incidence. For receivers at other reflected angles, the direct sound, and thus the −20 dB audibility criterion, is reduced due to the cylindrical spreading of the point source in 2D. In each subplot, the response has been averaged across 8 narrow band frequencies according to equation (3) to yield an octave-band smoothed response.

$$p_{\text{band}} = \sqrt{\frac{1}{n} \sum_{f \in [f_1, f_2]} |p|^2(f)}. \qquad (3)$$

First the reflections from the convex-edged panel are examined. At a distance of 15 meters, the convex-edged reflector produces reflections above the audibility criterion in every frequency band for both source positions. The direct sound always masks reflections near the source location because the direct field is strongest there. For normal incidence, the strongest reflections fall below the audibility criterion due to the strength of the direct field. Nevertheless, the direct field falls off with angle faster than the reflected field. The result is an angular region within which the reflected energy is above the audibility criterion. As shown in Figure 11, the angular extent of this region decreases with frequency. Reflections meet the audibility criterion at 63 Hz from 16° to 80° and 100° to 164°, while at 4000 Hz they meet the criterion only from 83° to 89° and 91° to 97°. Results are similar with 45° incidence, as shown in Figure 12 except that the audible range extends from 116° to 158° about the 4000 Hz specular reflection at 135°.

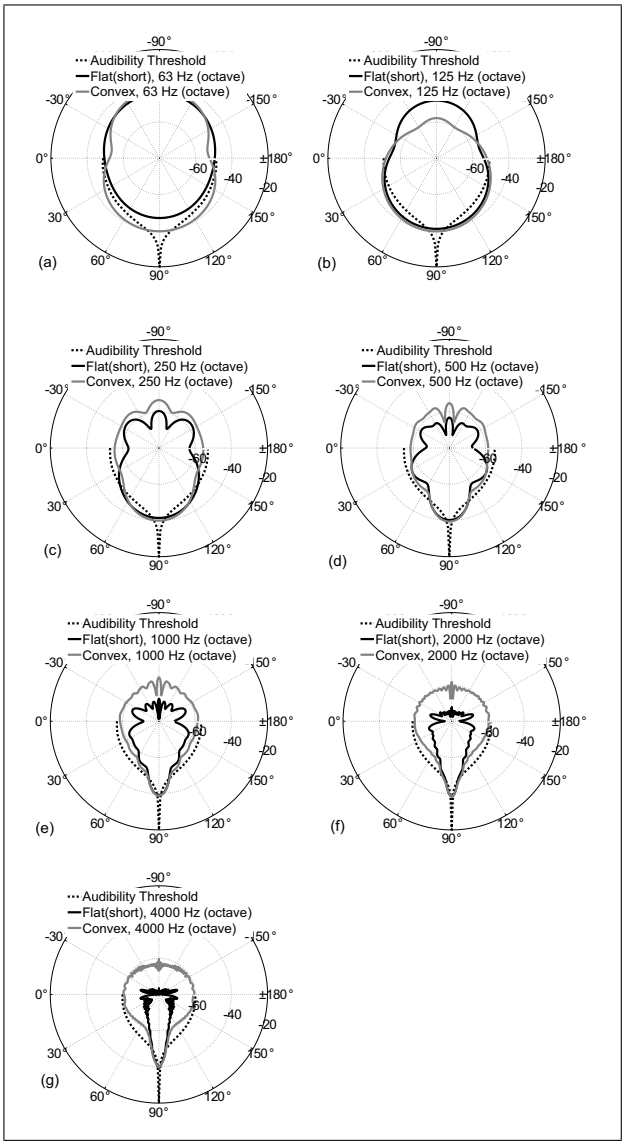

Figure 11. Audibility criterion and magnitude of the scattered reflections from the flat(short) panel versus the convex-edged panel, at normal incidence for octave bands (a) 63 Hz through (g) 4000 Hz.

Document downloaded by @DAEL, 2026-11-25 03:33:57 - personal use only

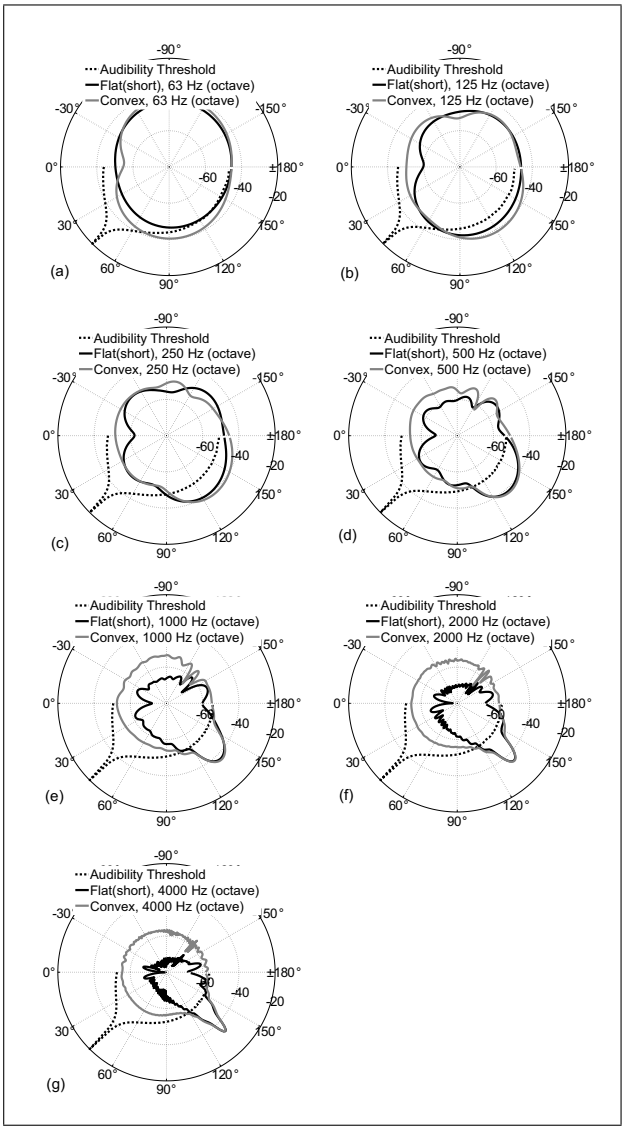

Figure 12. Audibility criterion and magnitude of the scattered reflections from the flat(short) panel versus the convex-edged panel, at 45° incidence for octave bands (a) 63 Hz through (g) 4000 Hz.

In all plots, the specular reflection from the convex-edged panel extends over the same angular range as the specular reflection from the flat(short) panel. The convex edges do not appear to add any magnitude to the reflected strength in the specular zone, but they do increase the strength of the scattered field at all other reflected angles, particularly at higher frequencies. At 4000 Hz for normal incidence, the convex-edged panel scatters more energy than the flat panel starting at reflected angles greater than 25° from the reflector normal. The approximate increase in level with the convex edge is 10–15 dB. Although this is a significant increase in reflected level, the reflections only approach the audibility criterion at near-grazing reflected angles. The authors conclude that a larger radius of curvature is necessary to produce individual reflections above the audibility criterion. As shown in Figure 7, the mid to high frequency reflection magnitude can be increased by 3 dB for each doubling of radius. This suggests that quadrupling the radius of curvature to 0.75 m, and thereby increasing the response magnitude by 6 dB, would create reflections that meet the audibility criterion at all frequency bands for nearly all receivers in Figure 11. Auralization listening tests with and without the convex edge using the appropriate angles of incidence and including the reverberance of the hall are necessary to rigorously assess the audibility of convex reflector edges.

These simulations have shown that individual reflections from a convex-edged panel, both specular and nonspecular, and both above and below the geometric limit frequency can be audible for certain source-reflector-listener arrangements. However, for listeners it is actually the sum of arriving energy that determines audibility. Individual reflections that are inaudible alone may indeed sum with other reflections to produce audible levels. Whether the frequency ripples above the geometric limit will be audible for multiple convex-edged panels is beyond the scope of this investigation. If this were to be the case, it would seem that using a variety of curvature radii would yield less coloration than multiple reflectors of identical radius.

6. Summary and conclusions

This project uses BEM to investigate the 2D sound field around reflector panels with convex edges. The hypothesis of producing completely smooth frequency responses at arbitrary receiver locations by adding a convex edge to 1.5 m reflector panels was disproved. However, complex edges did significantly affect the response at nonspecular receivers by strengthening the high frequency reflected energy, which otherwise decreased by 6 dB per octave.

The magnitude of nonspecular reflections can be adjusted by varying the radius of the convex edges. This behavior contrasts with that of specular reflections, whose magnitude above the geometric limit frequency cannot be increased by increasing reflector area. In other words, enlarging the flat portion of the reflector does not increase the magnitude of specular reflections, but increasing the radius of the convex edge does increase the magnitude of nonspecular reflections. Designers can therefore use the convex edge to manipulate the magnitude of reflections in nonspecular directions.

The results found in this study may be extrapolated to design as follows. Convex-edged reflector panels are most useful when sound energy is to be spread beyond the specular reflection zone. An example application is a reflector intended to help musicians communicate to all other orchestra sections. If sound energy is to be directed to a single location, such as a specific audience section or to the conductor's location, a flat panel is more efficient at directing sound energy in a specific direction.

To minimize simulation time, simulations were run using two-dimensional (2D) reflector geometries. The results from 2D simulations can be generalized to three dimensions (3D) only under the following conditions: a

Document downloaded by @DAEL, 2026-11-25 03:33:57 - personal use only

point source in 2D is equivalent to a line source in 3D, and the 2D geometries in Figure 3, Figure 6, and Figure 9 are equivalent to 3D shapes with the same cross section extruded infinitely into and out of the page. For concert hall applications, such a generalization may indeed be justified. In many applications, reflector panels hung above the stage span the width of the stage. When multiple musicians playing the same instrument are lined up across the stage, their radiation approaches that of a line source [19]. Therefore, the results from these 2D simulations generalize to realistic onstage 3D situations. A topic for further research is the validation of these principles using the full 3D BEM.

The audibility of individual reflections from the convex-edged reflector has been considered using an audibility threshold of 20 dB below the direct sound strength. This −20 dB criterion is only a rough approximation. In reality, the audibility of reflections depends on several variables including signal type, reverberant vs anechoic environment, incidence angles, and time delay of reflection. Also, if multiple reflectors were used, a combination of individually inaudible reflections could still sum to audible levels. Therefore, auralization listening tests of reflector panel responses with and without convex edges are necessary to rigorously determine the audibility of convex edges. Nevertheless, the results with the rough −20 dB audibility criterion show that a curvature radius greater than 0.19 meters may be necessary to produce audible reflections across the entire nonspecular zone from a single reflector. A quarter-curve instead of a half-curve is expected to conduct less energy behind the panel, and more energy to the source side of the reflector.

Acknowledgement

This material is based upon work supported by the United States National Science Foundation under Grant No. 0134 591. The authors would like to thank the anonymous reviewers for their close reading and their helpful suggestions for revisions to this manuscript. The authors also thank Prof. Michael Vorländer for helpful conversations regarding this project.

References

[1] J. H. Rindel: Attenuation of sound reflections due to diffraction. Proceedings of NAM-86, Nordic Acoustical Meeting, Aalborg, 1986, 257–260.

[2] L. Beranek: Concert hall acoustics-1992. J. Acoust. Soc. Am. **92** (1992) 1–40.

[3] H. F. Olson: Elements of acoustical engineering. Van Nostrand, Princeton, N. J., 1957.

[4] U. P. Svensson, R. I. Fred, J. Vanderkooy: An analytic secondary source model of edge diffraction impulse responses. J. Acoust. Soc. Am. **106** (1999) 2331–2344.

[5] R. R. Torres, U. P. Svensson, M. Kleiner: Computation of edge diffraction for more accurate room acoustics auralization. J. Acoust. Soc. Am. **109** (2001) 600–610.

[6] R. H. Nichols: Effect of finite baffles on response of source with back enclosed. J. Acoust. Soc. Am. **18** (1946) 151–154.

[7] L. Beranek: Acoustic measurements. John Wiley and Sons, New York, 1949.

[8] G. R. Watts, P. A. Morgan, M. Surgand: Assessment of the diffraction efficiency of novel barrier profiles using an MLS-based approach. J. Sound Vib. **274** (2004) 669–683.

[9] T. Ishizuka, K. Fujiwara: Performance of noise barriers with various edge shapes and acoustical conditions. Appl. Acoust. **65** (2003) 125–141.

[10] F. Asdrubali: On the experimental evaluation of the performances of noise barrier diffracting devices. Acta Acustica united with Acustica **93** (2007) 659–669.

[11] M. Möser, R. Volz: Improvement of sound barriers using headpieces with finite acoustic impedance. J. Acoust. Soc. Am. **106** (1999) 3049–3060.

[12] Sysnoise user manual. Rev 5.6. LMS International, Leuven, Belgium, 2003.

[13] E. J. Skudrzyk: The foundations of acoustics: Basic mathematics and basic acoustics. Springer, New York, 1971.

[14] J. Blauert: Spatial hearing. MIT Press, Cambridge, 1997.

[15] H. Kuttruff: Room acoustics. Fourth edition. Spon, London, 2000.

[16] D. Begault: Audible and inaudible early reflections. Proc. 100th Conv. of Audio Eng. Soc., 1996.

[17] S. Bech: Timbral aspects of reproduced sound in small rooms. I. J. Acoust. Soc. Am. **97** (1995) 717–1726.

[18] S. E. Olive, F. E. Toole: The detection of reflections in typical rooms. J. Audio Eng. Soc. **37** (1989) 539–553.

[19] M. Long: Architectural acoustics. Elsevier, London, 2006.

Document downloaded by @DAEL, 2026-11-25 03:33:57 - personal use only